system ∅ 42,4 x 2 /∅ 12x1,5; AISI 304/ satin

∅42,4x2

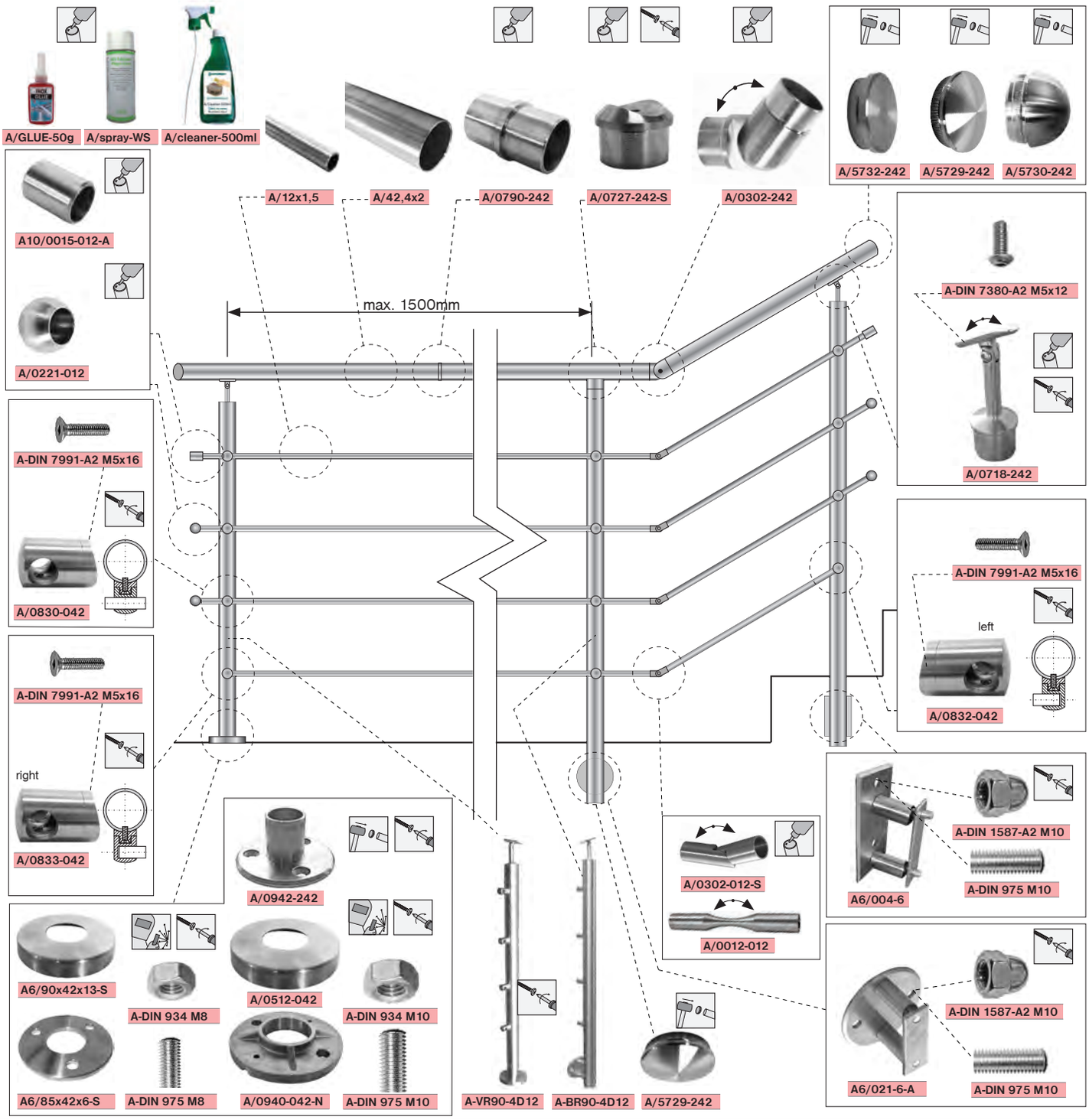

handle system ∅ 42,4 x 2; AISI 304/ satin

∅42,4x2

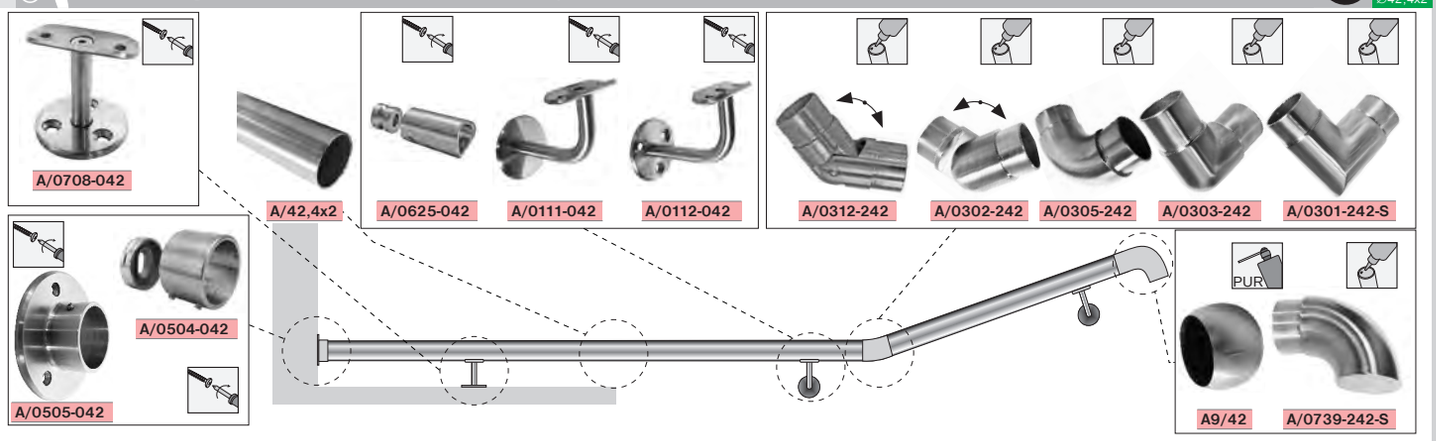

brus/satin K320 lesk/polish